Safe Operation Practices • Set Up • Controls • Operation • Maintenance • Specifications • Warranty

Cub Cadet COMMERCIAL

OPERATOR'S MANUAL

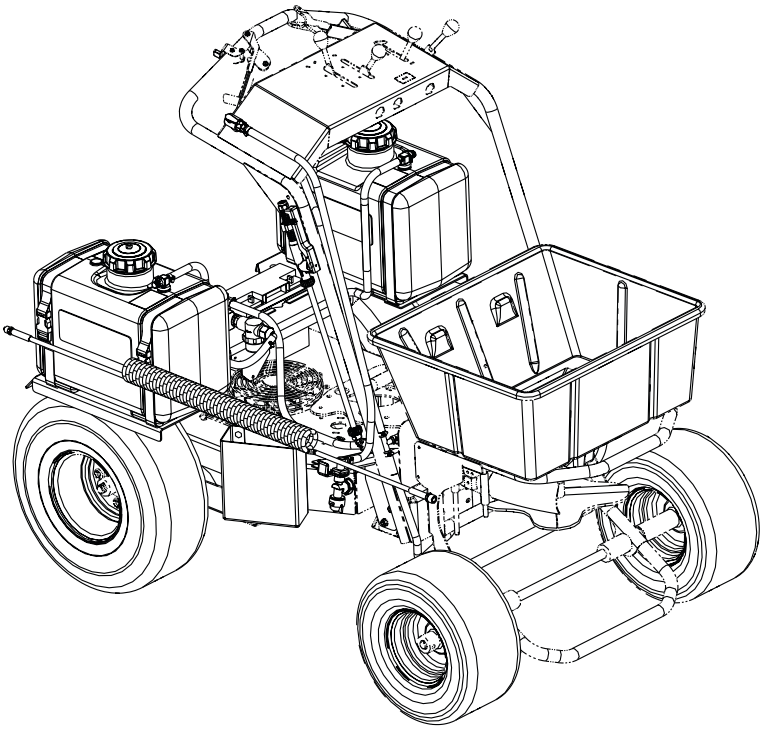

Hydrostatic Stand-On Self-Propelled Spreader/Sprayer

⚠ WARNING

READ AND FOLLOW ALL SAFETY RULES AND INSTRUCTIONS IN THIS MANUAL BEFORE ATTEMPTING TO OPERATE THIS MACHINE.
FAILURE TO COMPLY WITH THESE INSTRUCTIONS MAY RESULT IN PERSONAL INJURY.

CUB CADET LLC, P.O. BOX 361131 CLEVELAND, OHIO 44136-0019

Printed In USA

Form No. 769-04150
(April 19, 2010)

To The Owner

1

Thank You

Thank you for purchasing a Hydrostatic Stand-On Spreader-Sprayer manufactured by Cub Cadet. It was carefully engineered to provide excellent performance when properly operated and maintained.

Please read this entire manual prior to operating the equipment. It instructs you how to safely and easily set up, operate and maintain your machine. Please be sure that you, and any other persons who will operate the machine, carefully follow the recommended safety practices at all times. Failure to do so could result in personal injury or property damage.

All information in this manual is relative to the most recent product information available at the time of printing. Review this manual frequently to familiarize yourself with the machine, its features and operation. Please be aware that this Operator's Manual may cover a range of product specifications for various models. Characteristics and features discussed and/or illustrated in this manual may not be applicable to all models. We reserve the right to change product specifications, designs and equipment without notice and without incurring obligation.

If you have any problems or questions concerning the machine, phone your local Cub Cadet dealer or contact us directly. Cub Cadet's Dealer Locator telephone number, web site address and mailing address can be found on this page. We want to ensure your complete satisfaction at all times.

Throughout this manual, all references to *right* and *left* side of the machine are observed from the operating position.

The engine manufacturer is responsible for all engine-related issues with regards to performance, power-rating, specifications, warranty and service. Please refer to the engine manufacturer's Owner's/Operator's Manual, packed separately with your machine, for more information.

Table of Contents

Record Product Information

Before setting up and operating your new equipment, please locate the model plate on the equipment and record the information in the provided area to the right. You can locate the model plate by standing at the operator's position and looking underneath the control panel. This information will be necessary, should you seek technical support via our web site or with your local Cub Cadet dealer.

Model Number

☐☐☐☐☐☐☐☐☐☐☐

Serial Number

☐☐☐☐☐☐☐☐☐☐☐

Customer Support

If you have difficulty assembling this product or have any questions regarding the controls, operation, or maintenance of this machine, you can seek help from the experts. Choose from the options below:

◊ Visit us on the web at www.cubcadet.com

◊ Locate your nearest Cub Cadet Dealer at (877) 282-8684

◊ Write us at Cub Cadet LLC • P.O. Box 361131 • Cleveland, OH • 44136-0019

Important Safe Operation Practices

2

WARNING: This symbol points out important safety instructions which, if not followed, could endanger the personal safety and/or property of yourself and others. Read and follow all instructions in this manual before attempting to operate this machine. Failure to comply with these instructions may result in personal injury.
When you see this symbol. **HEED ITS WARNING!**

CALIFORNIA PROPOSITION 65

WARNING: Engine Exhaust, some of its constituents, and certain vehicle components contain or emit chemicals known to State of California to cause cancer and birth defects or other reproductive harm.

WARNING: Battery posts, terminals, and related accessories contain lead and lead compounds, chemicals known to the State of California to cause cancer and reproductive harm. *Wash hands after handling.*

DANGER: This machine was built to be operated according to the safe operation practices in this manual. As with any type of power equipment, carelessness or error on the part of the operator can result in serious injury. This machine is capable of amputating fingers, hands, toes and feet and throwing objects. Failure to observe the following safety instructions could result in serious injury or death.

WARNING - FOR THE STATE OF CALIFORNIA: A person shall not sell, offer for sale, lease, or rent to a person any equipment that is powered by an internal combustion engine subject to Section 4442 or 4443, and not subject to Section 13005 of Health and Safety Code, unless that equipment has a permanent writing label attached that is in plain view to the operator that states, 'WARNING-Operation of This Equipment May Create Sparks That Can Start Fires Around Dry Vegetation. A Spark Arrestor May be Required. The Operator Should Contact Local Fire Agencies For Laws or Regulations Relating to Fire Prevention Requirements.'

General Operation

1. Read this Operator's Manual completely before starting the machine. Study the controls and learn the proper sequence of operation. Retain Operator's Manual in a safe place for future reference.
2. Do not allow anyone to operate or maintain this machine who has not read the manual. Never permit children under the age of 16 to operate this machine.
3. Always have your feet and hands clear of the controls when starting the engine.
4. Do not remove any shields, guards, decals or safety devices. If a shield, guard, decal or safety device is damaged or does not function, repair or replace it before operating the machine.
5. Always wear safety glasses, long pants and safety shoes when operating or maintaining this unit. Do not wear loose-fitting clothing.
6. Never run the engine indoors without adequate ventilation. Exhaust fumes are deadly.
7. To avoid serious burns, do not touch the engine or muffler while the engine is running or until it has cooled for at least 30 minutes after it has been shut off.
8. Keep adults, children and pets away from the area to be spread/sprayed.
9. Spread/spray only in daylight.
10. Always check the area to be spread/sprayed and remove debris and other objects prior to spreading/spraying.
11. Watch for holes, sprinkler heads and other hidden hazards.
12. Reduce speed when making sharp turns.

13. Always have proper footing on slopes and hill sides and never operate when conditions are slippery. Be very careful on wet grass.
14. Always keep both hands on the handles.
15. Be careful when crossing gravel paths or road- ways.
16. Never leave the machine unattended without placing the ground speed control levers in neutral, engaging the park brake, shutting off the engine and closing the fuel shutoff valve.
17. Always park the unit and start the engine on a level surface with the ground speed control levers in neutral, and the park brake engaged.
18. If you hit a solid object while spreading/spraying, place the ground speed control levers in neutral, engage the park brake and stop the engine. Disconnect the spark plug wire and inspect for damage. Repair any damage.
19. Do not operate machine on excessively steep (more than 15 degrees) slopes. Go laterally or diagonally across the slope, not up and down the slope.
20. Always disconnect the spark plug wire to prevent the engine from accidentally starting before performing any maintenance on this machine.
21. Keep the machine and especially the engine/pump area clean and free of grease, grass and leaves to reduce the potential for over heating and fire.
22. The speed and direction control levers located on the handle are designed for your safety. Do not modify them or operate the machine if they are damaged.

General Requirements

Personal Protective Equipment (PPE):

OSHA Standard 1910.132 through 1910.139

23. OSHA standard 1910.132 states in relevant part:
    a. Protective equipment, including personal protective equipment or PPE, for eyes, face, head, and extremities, protective clothing, respiratory devices, and protective shields and barriers, shall be provided, used, and maintained in a sanitary and reliable condition where ever it is necessary by reason of hazards of processes or environment, chemical hazards, radiological hazards, or mechanical irritants encountered in a manner capable of causing injury or impairment in the function of any part of the body through absorption, inhalation or physical contact.

This standard is subject to change. Please check www.osha.gov for the latest regulatory updates

General

Sometimes, it is not possible to reduce a hazard by eliminating it, substituting a less hazardous process or product, making changes to equipment, or even by changing how you do the job. That is when you need personal protection.

PPE includes items like gloves, goggles, boots, hearing protection and respirators. Respirators filter out particles or block gases and vapors that can harm the respiratory system. With a surface area well supplied with blood vessels and equal in size to a tennis court, the lungs are the quickest and most direct route for absorbing harmful substance into your body.

NOTE: PPE does not prevent accidents, but it does prevent or reduce injury and even fatalities when used properly.

Equipment (PPE)

Protective equipment must be selected carefully. Always test fit the protective equipment to be sure it fits properly and comfortably. If it is not comfortable — it will not be worn; if it is not worn — it will not protect. PPE includes:

- Respirators
- Chemical-resistant clothing
- Hearing protectors
- Gloves
- Safety goggles and glasses
- Hard hats
- Sensors to detect hazardous substance
- Communication devices used for safe deployment of workers

Inhaling pesticide fumes and mists is a very common entry route of pesticides into the body. Absorption through the lungs is great and the sensitivity is high.

The National Institute for Occupational Safety and Health (NIOSH), under authority of the Federal Mine Safety and Health Act of 1977 and the Occupational Safety and Health Act of 1970, tests, approves, and certifies respiratory equipment as being safe for its intended purpose.

NOTE: Always be certain that the NIOSH compliance number is on the product before purchasing respiratory equipment.

Two systems of respiratory protection are available, depending on the type of respiratory risk involved: air-purification (filtering) and air-supplying. For most pesticide work, the air-purifying equipment is adequate and safe.

Protective equipment is usually required by the pesticide label in one form or another and is integral to safe pesticide application. Chemical-protective clothing consists of multi-layered garments made out of various materials that protect against a variety of hazards. Because no single material can protect against all chemicals, multiple layers of various materials usually are used to increase the degree of protection. Protection is maximized by total encapsulation (completely covering the wearer). An assortment of types of chemical-protective hats, hoods, gloves, and boot covers are used with the garments.

There are many brands and models of protective equipment available for use in pesticide application. Price is not always an indicator of quality, so shop carefully.

NOTE: Select equipment that is NIOSH tested and approved.

Protective equipment, appropriate for the task and hazards that an employee could be potentially exposed to, shall be provided by the employer. Since comfort and proper fit must be considered, the person who is going to use it must select the proper size to ensure correct fit and function. Unused protective equipment does not help anyone.

NOTE: Many supply centers, hardware stores, chemical retailers, and equipment/machinery dealers keep protective equipment in stock.

Training

Written procedures shall be developed for PPE use. These procedures shall include all information and guidance necessary for their proper selection, use and care. The employer shall provide fitting instructions including demonstrations and practice in how the PPE should be worn, It is essential that both supervisors and workers be properly instructed in PPE selection, use, and maintenance. Training shall provide the workers an opportunity to handle PPE, and have it fitted properly.

When to replace PPE

All PPE shall be inspected routinely before and after each use. A program for maintenance and care of PPE shall be initiated and be adjusted to the type of work place, working conditions, and hazards. It shall include the following:

- Inspection for defects and damage
- Cleaning and disinfecting
- Repair
- Storage

Many factors influence how long PPE (especially respirators) remains effective. As well as hours of use, an air-purifying respirator's service life is affected by the concentration of dust and other contaminants in the environment; the user's body size; how strenuously the user works while the respirator is worn; and how the respirator is stored.

NOTE: As a result, it's not possible to specify a length of time after which a respirator should be replaced.

In general, replace a mask or filter when it is visibly dirty or damaged, or when you experience difficulty breathing through it. Replace respirator cartridges when you can smell or taste chemical while or after using the respirator, or according to the manufacturer's recommendations. Replacement or repairs shall be done only by experienced person with parts designed for the PPE. No attempts shall be made to replace components or to make adjustments or repairs beyond the manufacturer's recommendations.

Slope Operation

Slopes are a major factor related to loss of control and tip-over accidents, which can result in severe injury or death.

CAUTION: All slopes require extra caution. If you cannot back up the slope or if you feel uneasy on it, do not make any turns on it.

For your safety, use the slope gauge included in this section to measure slopes before operating this unit on a sloped or hilly area. If the slope is greater than 15 degrees as shown on the slope gauge, do not operate this unit on that area or serious injury could result.

DO:

- Go across slopes, not up and down.
- Remove obstacles such as rocks, limbs, etc.
- Watch for holes, ruts or bumps. Uneven terrain could overturn the machine. Tall grass can hide obstacles.
- Use slow speed. Choose a low enough speed so that you will not have to stop while on the slope.
- Follow the manufacture's recommendations for counterweights with attachments to improve stability.
- Keep all movement on the slopes slow and gradual. Do not make sudden changes in speed or direction. Rapid acceleration or deceleration could cause the front of the machine to lift and rapidly flip over backwards, which could cause serious injury.
- Avoid starting or stopping on a slope. If the tires lose traction, disengage the blades and proceed slowly straight down the slope.

DO NOT:

- Do not turn on slopes unless necessary; then, turn slowly and use extra care.
- Do not operate near drop-offs, ditches or embankments. The unit could suddenly turn over if a wheel is over the edge of a cliff or ditch, or if an edge caves in.
- Do not operate on wet grass. Reduced traction could cause sliding.
- Do not try to stabilize the machine by putting your foot on the ground.

Transporting Machines

- Machines operated on public roads must comply with state & local ordinances, SAE J137, and ANSI/ASABE S279.
- Use care when loading or unloading machines onto trailers and trucks.
- If ramps are used, they must be full width, and secured to the trailer or truck.
- Machines must be secured onto trailers and trucks with straps, chains, cables, ropes, or other means deemed adequate for that purpose. The front and rear of the machines must be secured to the trailer or truck in both the lateral and vertical directions.

Service

Safe Handling of Gasoline:

1. To avoid personal injury or property damage use extreme care in handling gasoline. **Gasoline is extremely flammable and the vapors are explosive.** Serious personal injury can occur when gasoline is spilled on yourself or your clothes which can ignite. Wash your skin and change clothes immediately.

a. Use only an approved gasoline container.

b. Never fill containers inside a vehicle or on a truck or trailer bed with a plastic liner. Always place containers on the ground away from your vehicle before filling.

c. When practical, remove gas-powered equipment from the truck or trailer and refuel it on the ground. If this is not possible, then refuel such equipment on a trailer with a portable container, rather than from a gasoline dispenser nozzle.

d. Keep the nozzle in contact with the rim of the fuel tank or container opening at all times until fueling is complete. Do not use a nozzle lock-open device.

e. Extinguish all cigarettes, cigars, pipes and other sources of ignition.

f. Never fuel machine indoors.

g. Never remove gas cap or add fuel while the engine is hot or running. Allow engine to cool at least two minutes before refueling.

h. Never over fill fuel tank. Fill tank to no more than 1 inch below bottom of filler neck to allow space for fuel expansion.

i. Replace gasoline cap and tighten securely.

j. If gasoline is spilled, wipe it off the engine and equipment. Move machine to another area. Wait 5 minutes before starting the engine.

k. To reduce fire hazards, keep machine free of grass, leaves, or other debris build-up. Clean up oil or fuel spillage and remove any fuel soaked debris.

l. Never store the machine or fuel container inside where there is an open flame, spark or pilot light as on a water heater, space heater, furnace, clothes dryer or other gas appliances.

m. Allow a machine to cool at least five minutes before storing.

General Service

1. Never run an engine indoors or in a poorly ventilated area. Engine exhaust contains carbon monoxide, an odorless, and deadly gas.
2. Before cleaning, repairing, or inspecting, make certain all moving parts have stopped. Disconnect the spark plug wire and ground against the engine to prevent unintended starting.
3. Keep all nuts, bolts, and screws tight to be sure the equipment is in safe working condition.
4. After striking a foreign object, stop the engine, disconnect the spark plug wire(s) and ground against the engine. Thoroughly inspect the machine for any damage. Repair the damage before starting and operating.
5. Never attempt to make adjustments or repairs to the machine while the engine is running.
6. For safety protection, frequently check components and replace immediately with original equipment manufacturer's (O.E.M.) parts only, listed in the parts manual. "Use of parts which do not meet the original equipment specifications may lead to improper performance and compromise safety!"
7. Do not change the engine governor settings or over-speed the engine. The governor controls the maximum safe operating speed of the engine.
8. Maintain or replace safety and instruction labels, as necessary.
9. Observe proper disposal laws and regulations for gas, oil, etc. to protect the environment.

Do not modify engine

To avoid serious injury or death, do not modify engine in any way. Tampering with the governor setting can lead to a runaway engine and cause it to operate at unsafe speeds. Never tamper with factory setting of engine governor.

Notice Regarding Emissions

Engines which are certified to comply with California and federal EPA emission regulations for SORE (Small Off Road Equipment) are certified to operate on regular unleaded gasoline, and may include the following emission control systems: Engine Modification (EM), Oxidizing Catalyst (OC), Secondary Air Injection (SAI) and Three Way Catalyst (TWC) if so equipped.

Spark Arrestor

WARNING! This machine is equipped with an internal combustion engine and should not be used on or near any unimproved forest-covered, brush covered or grass-covered land unless the engine's exhaust system is equipped with a spark arrester meeting applicable local or state laws (if any).

If a spark arrester is used, it should be maintained in effective working order by the operator. In the State of California the above is required by law (Section 4442 of the California Public Resources Code). Other states may have similar laws. Federal laws apply on federal lands.
A spark arrester for the muffler is available through your nearest engine authorized service dealer or contact the service department, P.O. Box 361131 Cleveland, Ohio 44136-0019.

Safety Symbols

This page depicts and describes safety symbols that may appear on this product. Read, understand, and follow all instructions on the machine before attempting to assemble and operate.

Symbol	Description
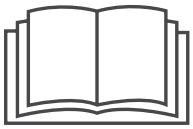	READ THE OPERATOR'S MANUAL(S) Read, understand, and follow all instructions in the manual(s) before attempting to assemble and operate
	DANGER — ROTATING BLADES To reduce the risk of injury, keep hands and feet away. Do not operate unless discharge cover or grass catcher is in its proper place. If damaged, replace immediately.
	DANGER — BYSTANDERS Do not mow when children or others are around.
	DANGER — HAND/ FOOT CUT Keep hands and feet away from rotating parts.
	DANGER — THROWN DEBRIS Remove objects that can be thrown by the blade in any direction. Wear safety glasses.
	DANGER — SLOPES Use extra caution on slopes. Do not mow slopes greater than 15°.
	WARNING—GASOLINE IS FLAMMABLE Allow the engine to cool at least two minutes before refueling.
	WARNING— CARBON MONOXIDE Never run an engine indoors or in a poorly ventilated area. Engine exhaust contains carbon monoxide, an odorless and deadly gas.
	WARNING— HOT SURFACE Engine parts, especially the muffler, become extremely hot during operation. Allow engine and muffler to cool before touching.

WARNING: Your Responsibility—Restrict the use of this power machine to persons who read, understand and follow the warnings and instructions in this manual and on the machine.

SAVE THESE INSTRUCTIONS!

Sight and hold this level with a vertical tree...

or a corner of a building...

or a fence post

Fold along dotted line (represents a 15° slope)

15°

Use this page as a guide to determine slopes where you may not operate safely.

WARNING: Do not operate your machine on such slopes. Do not operate on inclines with a slope in excess of 15 degrees (a rise of approximately 2-1/2 feet every 10 feet). A riding machine could overturn and cause serious injury. Operate across the face of slopes, never up and down slopes.

Initial Adjustments

WARNING! Before performing any adjustments, disconnect the spark plug wire to prevent the engine from accidentally starting.

1. Check the tire pressure. Drive wheels should be inflated to 15 psi. Front wheels (unless foam-filled) should be inflated to 15 psi.

   Note: New tires are overinflated in order to properly seat the bead to the rim.

2. The tension of the transaxle drive belt should be adjusted so that a five pound pull between the engine traction drive pulley and the pump drive pulley opposite the idler pulley deflects the belt about 3/16".

3. The long speed control cables which connect to the pump control levers should initially be adjusted so that when the ground speed control levers are in neutral, and the speed levers are released from the neutral position, the machine stands still with the engine running.
   If the machine starts to creep forward or to the rear in this situation, then the speed control cable must be adjusted:

   a. Loosen the nut on the cable.

   b. Adjust until the drive wheel stops moving.

   c. Retighten the nut.

4. Lubricate all fittings listed in the maintenance section.

5. Check that all nuts, bolts, and screws are tight.

Gas and Oil Fill-up

WARNING! Use extreme care when handling gasoline. Gasoline is extremely flammable and the vapors are explosive. Never fuel machine indoors or while the engine is hot or running. Extinguish cigarettes, cigars, pipes, and other sources of ignition.

IMPORTANT: **Your spreader-sprayer is shipped with motor oil in the engine.** However, **you MUST check the oil level before operating**. Be careful not to overfill.

1. Check the engine oil level. Fill to the proper level with 10W30 engine oil rated for service SF or higher.

2. Move the machine outdoors. Check the engine gasoline level. When filling the tank, stop when the gasoline reaches one inch from the top. This space must be left for expansion. Use fresh, clean, unleaded, regular gasoline.

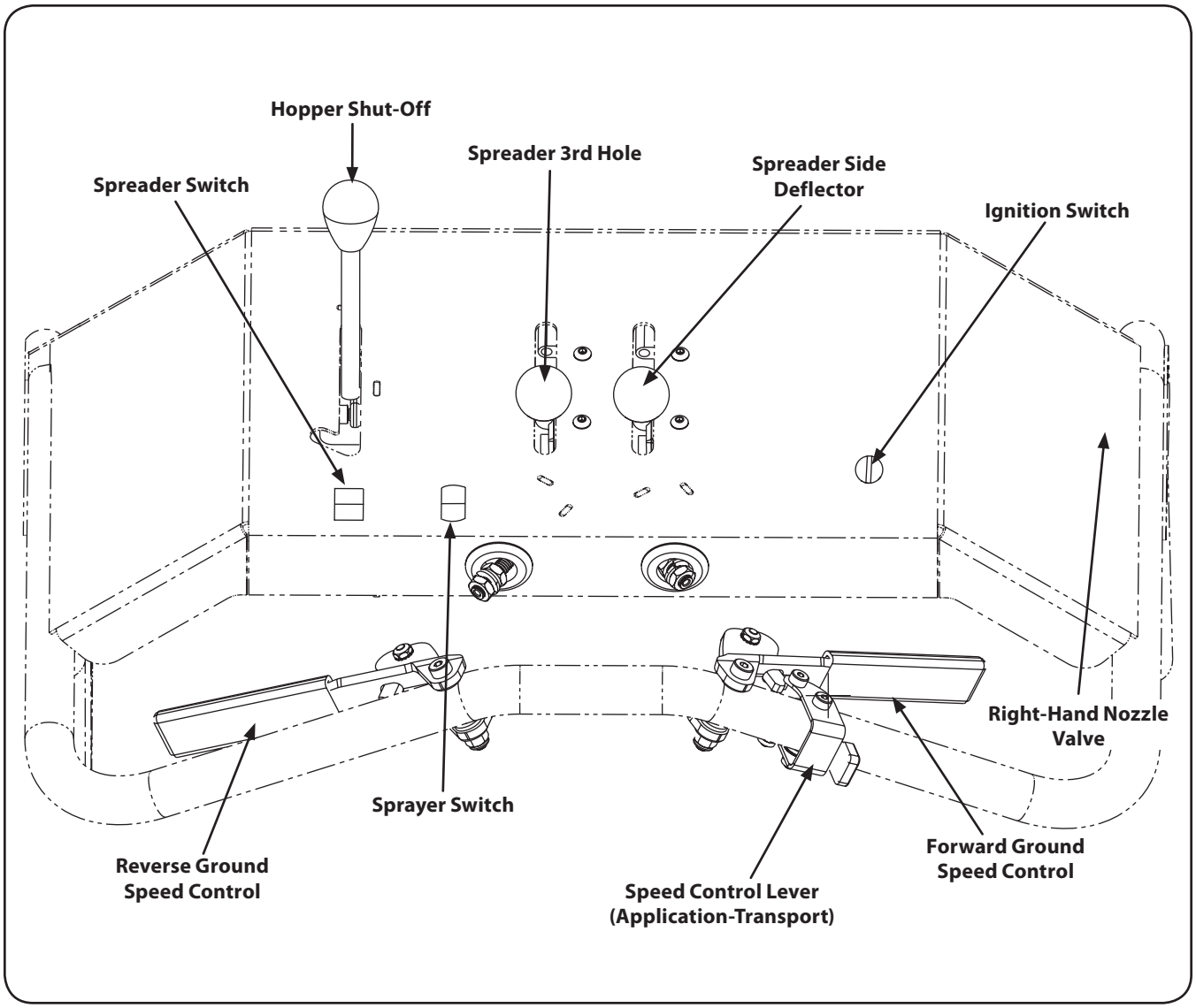

Figure 4-1

Spreader-sprayer controls and features are illustrated in Fig 4-1 and described on the following pages.

WARNING! Read and follow all safety rules and instructions in this manual, including the entire Operation section, before attempting to operate this machine. Failure to comply with all safety rules and instructions may result in personal injury.

Ground Speed Control Levers (Forward & Reverse)

Located on the right side of the control panel is the forward speed control lever. The left lever is for reverse. These two levers control the maximum output of the hydrostatic transaxle and thus the ground speed of the spreader independent of the engine speed. Moving the right lever rearward increases the forward speed and moving the left lever rearward increases the reverse speed. These levers moved in unison.

Note: To start the engine both levers must be in their neutral position.

Speed Control Lever (Application-Transport)

The speed control lever is located on the right side of the control panel next to the forward ground speed control and is used to select the level of ground speed. The application speed is the slower speed and transport is the faster speed.

Hopper Shut-Off

The hopper shut-off is located on the left side of the control panel and is used to open and close the center and right-hand holes at the bottom of the spreader hopper.

Ignition Switch

Located on the right side of the control panel, the ignition switch stops and starts the engine and also shuts off 12 VDC power to the spreader and sprayer.

Sprayer Switch

The sprayer switch is the right-hand switch located on the bottom left side of the control panel and is used to turn the sprayer nozzles on and off.

Spreader Switch

The spreader switch is the left-hand switch located on the bottom left side of the control panel and is used to turn the spreader impeller on and off.

Spreader Side Deflector

The spreader side deflector is controlled by the right-hand knob located on the center of the control panel and is used to stop the unit from spreading to the right of the spreading path.

Spreader 3rd Hole

The spreader 3rd hole is controlled by the left-hand knob located on the center of the control panel and is used to close and open the third (left-hand) hole at the bottom of the spreader hopper, which prevents or allows the unit to spread on the left side of the spreading path.

Pressure Gauge

Mounted in the pressure regulator housing next to the battery, the pressure gauge indicates the pressure in the output lines to the left, right, and center nozzles and the spray wand. The gauge is graduated in pounds per square inch (psi) and kilopascals (kPa). See Fig. 4-2.

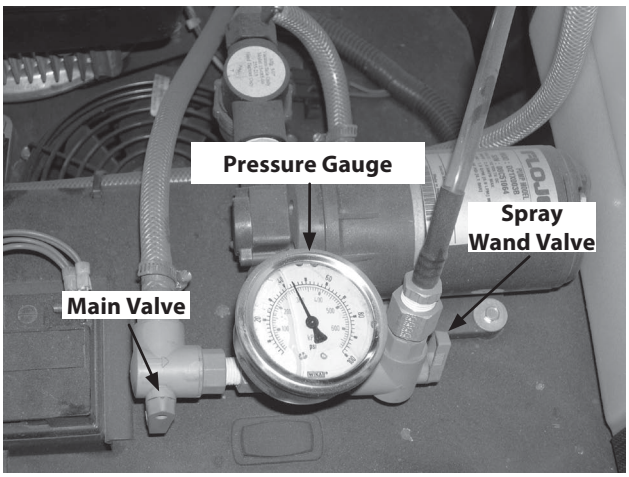

Figure 4-2

Pressure Valves

There are three pressure valves that control the flow of fluids on the unit:

Main Valve

The main valve is located to the left of the pressure gauge and controls flow to all three nozzles - left-hand, center, and right-hand. See Fig. 4-2.

Right Hand Spray Nozzle Valve

The right hand spray nozzle valve is located on the right side of the control panel. See Fig. 4-1. This valve turns off the flow to the right hand nozzle to narrow the spray pattern to the center and left hand side and/or to match that of the spreader when the chute deflector is used.

Spray Wand Valve

The spray wand valve is located to the right of the pressure gauge and is used to control flow to the spray wand. See Fig. 4-2.

Hour Meter and Tachometer

Located at the upper left edge of the control panel. When the machine is running the tachometer displays engine rpm. When the machine is off it displays time of operation.

Fuel Shutoff Valve

Located under the fuel tank, the handle turns 90 degrees to open or close. When the handle is in a horizontal position, it will shut off the flow of fuel to the engine. When it is turned to a vertical position, it will open and allow fuel to flow to the engine. Anytime the spreader is being transported or, if the machine will not be in use for 30 minutes or more, close the fuel shutoff valve to prevent flooding the engine.

Freewheeling Valve

A valve is located on the side of the hydrostatic transaxle. When the lever is moved into the "J" slot the spreader-sprayer can be pushed forward or pulled in reverse without the engine running. See Fig. 4-3.

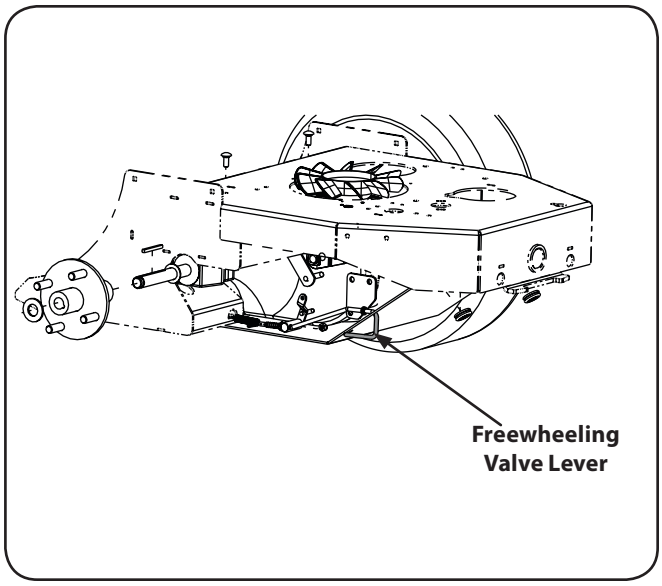

Figure 4-3

Parking Brake

The mechanical disc brake is activated by the lever in the foot platform area. See Fig. 4-4. Press down on the lever to engage the park brake, and lift up the lever to release.

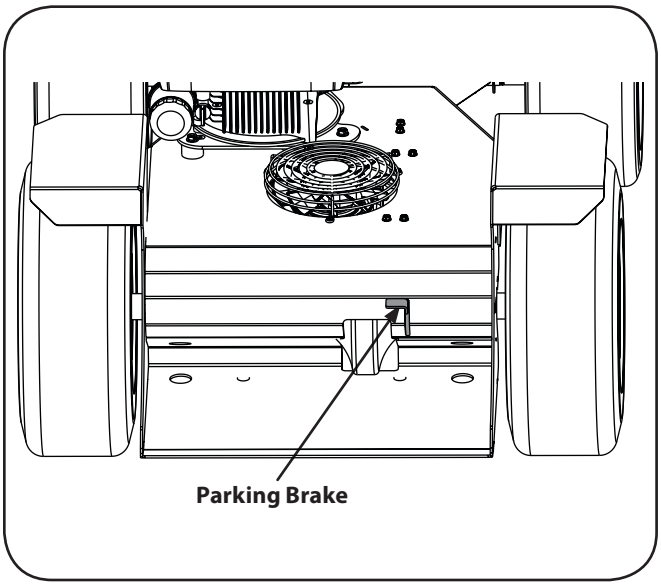

Figure 4-4

Note: The Parking Brake must be engaged to start the engine.

WARNING!: Make certain you thoroughly understand all of the safety precautions before you attempt to operate this machine.

IMPORTANT: Your spreader-sprayer is shipped with motor oil in the engine. However, you MUST check the oil level before operating. Be careful not to overfill. Refer to the Engine Operator's Manual included with your unit for complete Gasoline and Oil fill-up instructions.

Starting the Engine

1. Move the machine to a "test area" where you can operate it for about a half an hour without being disturbed.
2. Make sure that the ground speed control levers are in the neutral position and the park brake is engaged.
3. Connect the spark plug wire.
4. Open the fuel shutoff valve.
5. Pump the primer (one time if this is the first start of the day).
6. Turn the Ignition Switch or pull the recoil handle.

   Note: Do not crank the engine more than 30 seconds at one time, because it could damage the starter.

Stopping the Engine

1. To stop the unit, release both speed control levers.
2. Turn the ignition switch to the "off" position to stop the engine.
3. Close the fuel shutoff valve, and disconnect the spark plug wire to prevent unintended starting.

Driving The Spreader-Sprayer

1. Move the forward ground speed control lever to contact the application stop.

   CAUTION: Set the ground speed control lever in the application position until you are fully familiar with the operation of the machine.

2. To turn the machine, move the control handle to the side opposite of the way you want to turn, i.e., move the control handle left and the machine turns right. Move the control handle right, and the machine turns left.
3. To stop the mower's forward motion, release the forward and reverse speed control levers.
4. Before moving into reverse, the machine's forward motion should be completely stopped.
5. Practice operating the machine and as you gain confidence, move the ground speed selector lever to the transport position. Operate the machine in the application position until you are comfortable and confident with the controls.

   Note: Set the ground speed control lever at the desired speed for spreading or spraying. Refer to the application chart later in this section.
6. After the first full day of use, all nuts, bolts and screws should be rechecked for proper tightness and the belts should be rechecked for proper tension.

Slope Operation

Refer to the SLOPE GAUGE in the Safe Operation Practices section of this manual to help determine slopes where you may operate the spreader-sprayer safely.

WARNING: Do not spread-spray on inclines with a slope in excess of 15 degrees (a rise of approximately 2-1/2 feet every 10 feet). The spreader-sprayer could overturn and cause serious injury.

DO:

- Go across slopes, not up and down.
- Remove obstacles such as rocks, limbs, etc.
- Watch for holes, ruts or bumps. Uneven terrain could overturn the machine. Tall grass can hide obstacles.
- Use slow speed. Choose a low enough speed so that you will not have to stop while on the slope.
- Follow the manufacture's recommendations for counterweights with attachments to improve stability.
- Keep all movement on the slopes slow and gradual. Do not make sudden changes in speed or direction. Rapid acceleration or deceleration could cause the front of the machine to lift and rapidly flip over backwards, which could cause serious injury.
- Avoid starting or stopping on a slope. If the tires lose traction, disengage spreader-sprayer and proceed slowly straight down the slope.

DO NOT:

- Do not turn on slopes unless necessary; then, turn slowly and use extra care.
- Do not operate near drop-offs, ditches or embankments. The unit could suddenly turn over if a wheel is over the edge of a cliff or ditch, or if an edge caves in.
- Do not operate on wet grass. Reduced traction could cause sliding.
- Do not try to stabilize the machine by putting your foot on the ground.

Using the Sprayer

1. Press the sprayer switch to the "ON" position.
2. Determine your spray path.
   a. Turn on the main valve to allow flow of fluid to the left, center, and right spray nozzles.
   b. Turn the right-hand spray nozzle off to shut off flow of fluid to the right side of the unit when the spreader chute deflector is used.
   c. Turn on the spray wand valve to use the spray wand.

   NOTE: The main valve must be turned off for independent flow to the spray wand.
3. To adjust the rate and width of fluid flow, adjust how far the main, right, or spray valves are open.

Using the Spreader

1. Press the spreader switch to the "ON" position to start the spreader impeller.

   NOTE: The impeller operates all the time when the switch is activated, and operates at a constant speed providing a uniform spread pattern. The application rate will vary with travel speed. Refer to the chart on the next page.
2. Determine your spread path:
   a. To achieve the widest spreading path, press the hopper shut-off lever forward to open the right-hand and center holes, and press the spreader 3rd hole lever forward to open the left-hand hole.
   b. Pull the spreader 3rd hole lever down to close the left-hand hole and spread ONLY to the center and right-hand side of the unit.
   c. Press the spreader 3rd hole lever up to open the left-hand hole and keeping the hopper shut-off in the OPEN position, push the spreader side deflector lever forward to spread only to the center and left-hand side of the unit.
   d. To spread ONLY to the left-hand side of the unit, press the spreader 3rd hole lever forward to open the left-hand hole and pull back the hopper shut-off lever to the OFF slot to close the right-hand and center holes.
   e. To limit your spreading path to the width of the unit, keep the 3rd hole closed and press the spreader side deflector lever forward to prevent spreading to the right-hand side of the unit.

Spreader Tips

1. Operate the spreader at a consistent speed (approximately 3.5 m.p.h. is recommended) and is achieved when the speed control lever is set for application.
2. Always close the holes before filling the hopper.
3. Be sure the screen is in place to prevent lumps or paper scraps from plugging the holes in the hopper bottom.
4. Always start driving forward before opening the hopper holes; close the hopper holes before forward motion is stopped.
5. Empty the spreader after each use. Wash the spreader thoroughly and allow it to dry. Keep the impeller clean.
6. Lubricate all moving parts. See "Lubrication" in the Maintenance section.

Spreader Calibration

Two items must be considered when calibrating a spreader. The first is the distribution pattern of the spreader, i.e., the pattern the product makes as it strikes the ground after being thrown out by the spreader's impeller. There are many factors which affect the distribution pattern of a spreader and some of them relate directly to the product being spread. For this reason, we recommend that the spreader be calibrated separately for every product to be applied. Spreader calibration should be checked at least once a month, or more often when the spreader is used frequently.

The second item is the product application rate, i.e., the amount of product applied per thousand square feet. This is important because over-application can be costly and may cause plant injury, while under-application will reduce the effectiveness of the product.

TO CALIBRATE A SPREADER, MAKE SURE TO:

1. Check the spreader discharge holes with all the levers in the closed positions.
2. If the discharge holes are not fully closed, adjust the jam nuts on the rate plate on/off cable located on the hopper shut-off.
3. Recheck the discharge holes with the hopper still in the closed position. Repeat this procedure until the holes are fully closed.

TO ACHIEVE A UNIFORM DISTRIBUTION PATTERN:

The most accurate method for checking pattern uniformity is to lay out shallow boxes or pans in a row on a line perpendicular to the direction of spreader travel. Eleven boxes or pans, two inches high placed on one-foot centers will provide accurate calibration.

To conduct the test:

1. Begin with the pattern slide completely open and set the rate control arm at the suggested approximate setting.
2. Make three passes over the boxes, driving the spreader in the same direction each time. The product caught in each box is then evaluated to determine the distribution pattern.
3. Weighing the product in each box is the most accurate, but a simpler method is to pour the contents of each box into a separate small vial or bottle.
4. Set the eleven vials or bottles side-by-side in order. This makes the pattern variation quite visible.
5. To reduce the amount of discharge to the right side (operator's right), the pattern slide should be partially closed and the test repeated until the distribution pattern is uniform.

TO ACHIEVE THE CORRECT PRODUCT APPLICATION RATE:

1. The approximate spreader settings printed on any product label should only be used as the initial setting for calibration. Set the rate control arm at this approximate setting. See Fig. 5-1.

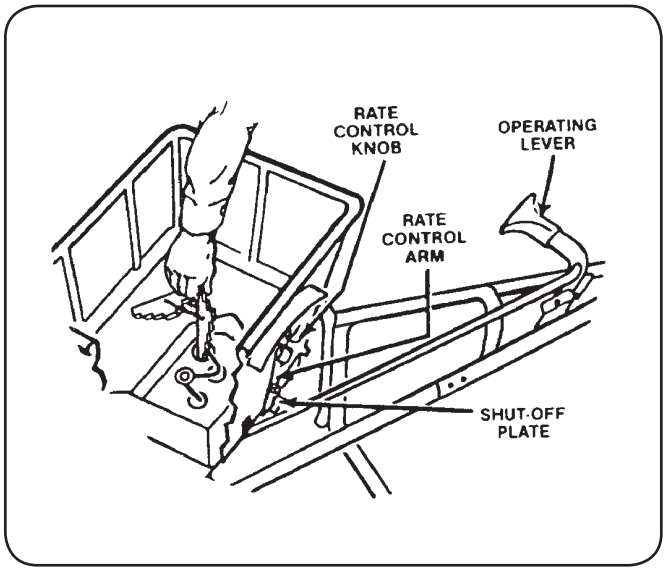

Figure 5-1

2. Using the collection boxes or pans, make a single pass over them to determine the effective pattern width. The effective pattern width is twice (2x) the distance to the point where the rate drops to one-half the average rate at the center.

   Example: If the product in the vials from the center boxes averages two inches in depth, count out to the vial which has one inch of product. If this is the fifth vial from the center and the boxes were on one-foot centers, the effective pattern width is ten feet (2 x 5 ft.).

3. Knowing the effective pattern width (ten feet), measure out a lineal distance to equal 1,000 sq. ft. (10 ft. x 100 ft. = 1,000 sq. ft.).
4. Weigh 20 lbs. of product and place it in the spreader hopper.
5. Spread it over the distance necessary to equal 1,000 sq. ft. (100 ft.).
6. Weigh the product left in the hopper and subtract this amount from the amount with which you started. The result is the application rate for this product in pounds per 1,000 sq. ft. that your spreader is currently adjusted to disperse.
7. Adjust the rate control arm up or down as needed and repeat this procedure until the correct application rate is achieved.

TO USE THE CALIBRATION GAUGES:

The Calibration Gauges provide a series of "steps", numbered in 1/32-inch increments, that will allow you to "fine-tune" the spreader. Refer to Fig. 5-2.

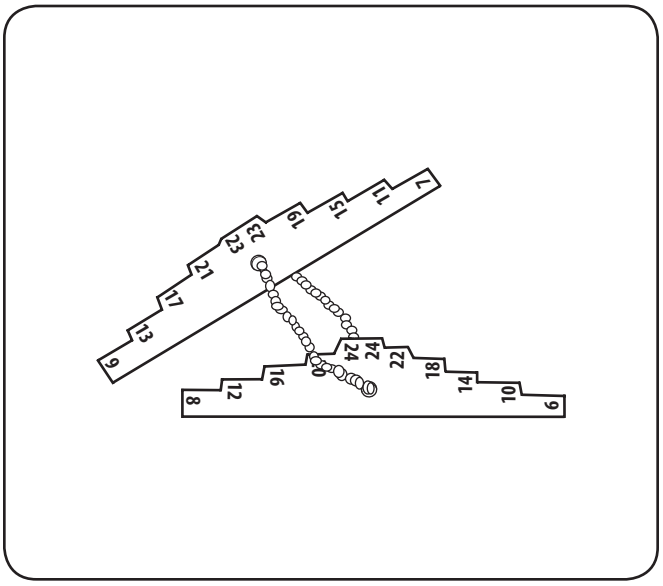

Figure 5-2

1. Once you have calibrated your spreader for the product chosen, open the hopper holes and insert the calibration gauges until you determine which step fits tightly into one of the open holes in the hopper bottom.
2. To recalibrate your spreader after a period of use, adjust the rate control arm to the "24" position.
3. Open the hopper holes and insert the even-numbered Calibration Gauge into one of the open holes in the hopper bottom.
4. Close the holes and let the shut off plate on the underside of the hopper make contact with the number 10 step on the Calibration Gauge.
5. Move the rate control arm back toward the "6" position until the bottom of the arm makes contact with the shut off plate. If your spreader is properly adjusted, the top of the rate control arm should be at setting "10".
6. To correct variances, remove the rate control arm, place the bottom of the arm (up to the bolt hole) in a vise, and bend either to the right or the left.

Transporting Spreader-Sprayer

- Machines operated on public roads must comply with state & local ordinances, SAE J137, and ANSI/ASABE S279.
- Use care when loading or unloading machines onto trailers and trucks.
- If ramps are used, they must be full width, and secured to the trailer or truck.
- Machines must be secured onto trailers and trucks with straps, chains, cables, ropes, or other means deemed adequate for that purpose. The front and rear of the machines must be secured to the trailer or truck in both the lateral and vertical directions.

Spreader and Sprayer Application Rates

The spreader-sprayer operates at an average system pressure of 45 lb/in^2. The 20 amp charging system provides adequate electrical power for the spreader, sprayer, or both together. With the system pressures and spray tips listed below, the effective spray width will be 9 feet and the output will be as indicated for 45 lb/in^2.

Sprayer Application Rate for Pressure and Travel Speed		
	4 mph	5 mph
35 psi, one Tee-Jet X"R11001VB" tip and two "OC-01 Brass" tips.		
Output	**0.281 gal/min……**	
gal/acre	**3.59**	**2.87**
gal/1000 ft^2	**0.082**	**0.066**
40 psi, one Tee-Jet X"R11001VB" tip and two "OC-01 Brass" tips		
Output	**0.300 gal/min……**	
gal/acre	**4.12**	**3.30**
gal/1000 ft^2	**0.095**	**0.076**
45 psi, one Tee-Jet X"R11001VB" tip and two "OC-01 Brass" tips		
Output	**0.315 gal/min……**	
gal/acre	**4.33**	**3.47**
gal/1000 ft^2	**0.100**	**0.079**
Note: The above values are based on manufacturer's information at 700 F, and actual values may vary based on chemical additives, temperature, as well as system cleanliness and wear.		

The electric-powered spreader maintains an impeller speed to provide an effective material spread width of 10 feet.

Spreader Application Rate de-rating for travel speed		
SPEED	**TIME/100 FT**	**APPLICATION RATE (AR)**
3.5 mph	**19.5 seconds**	**1.0 X AR**
4 mph	**17.0 seconds**	**0.875 X AR**
5 mph	**13.6 seconds**	**0.70 X AR**

Maintenance & Adjustments

6

WARNING! Before performing any maintenance disconnect the spark plug wire to prevent the engine from accidentally starting.

General Recommendations

- Always observe safety rules when performing any maintenance.
- The warranty on this machine does not cover items that have been subjected to operator abuse or negligence. To receive full value from warranty, operator must maintain this machine as instructed here.
- Changing of engine-governed speed will void engine warranty.
- All adjustments should be checked at least once each season.
- Periodically check all fasteners and make sure these are tight.
- Close the fuel shutoff valve after each use.

Engine

Refer to the Kawasaki Owner's Manual for all engine maintenance procedures and instructions.

NOTE: Maintenance, repair, or replacement of the emission control devices and systems which are being done at owner's expense may be performed by any engine repair establishment or individual. **Warranty repairs must be performed by a Cub Cadet Dealer**.

Change the Engine Oil

WARNING! If the engine has been recently run, the engine, muffler and surrounding metal surfaces will be hot and can cause burns to the skin. Exercise caution to avoid burns.

Maintain oil level as instructed in engine manual. The oil filter should be changed at every oil change interval. Be careful not to spill oil on any of the belts.

Air Cleaner

Service the pre-cleaner and cartridge/air cleaner element as instructed in the Kawasaki Owner's Manual.

Spark Plug

The spark plug should be cleaned and the gap reset once a season. Refer to the Kawasaki Owner's Manual for correct plug type and gap specifications.

Hydrostatic Transmission

The hydrostatic transmission is sealed at the factory and is maintenance-free. The fluid level cannot be checked and the fluid cannot be changed. The transaxle is not owner repairable. If you have a problem with a transaxle, please contact your service center for a replacement. Do not disassemble the transaxle.

Battery

CALIFORNIA PROPOSITION 65 WARNING! Battery posts, terminals, and related accessories contain lead and lead compounds, chemicals known to the State of California to cause cancer and reproductive harm. Wash hands after handling.

This machine is equipped with a belt-driven 20 AMP capacity generator (dynamo) with a solid state voltage regulator. The regulator will maintain the system voltage above 13 VDC when the engine is running, regardless of whether the spreader and/or sprayer are being operated. The battery is a sealed 12 VDC - 18 AMP-hour rated lead-acid type and is maintenance-free. Acid levels cannot be checked and fluid can not be added.

- Always keep the battery cables and terminals clean and free of corrosive build-up.
- After cleaning the battery and terminals, apply a light coat of petroleum jelly or grease to both terminals.

CAUTION: If removing the battery for cleaning, disconnect the NEGATIVE (Black) wire from it's terminal first, followed by the POSITIVE (Red) wire. When re-installing the battery, always connect the POSITIVE (Red) wire its terminal first, followed by the NEGATIVE (Black) wire. Be certain that the wires are connected to the correct terminals; reversing them could result in serious damage to your engine's alternating system.

Cleaning the Unit

Clean underside of the machine before each use to prevent build-up of fertilizer or other debris. Any fuel or oil spilled on the machine should be wiped off promptly. Do NOT allow debris to accumulate around the cooling fins of the engine, the transmission's cooling fan or on any other part of the machine, especially the belts and pulleys. Wash the machine off with water. Be sure to clean out materials from under the hopper. Allow the machine to dry before storing. Follow steps below for this job.

1. Disconnect the spark plug wire.
2. Close the fuel shutoff valve.
3. Allow the machine to cool.
4. Tip the machine on the side with the air cleaner facing up. Hold the machine firmly.

   WARNING: Never tip the machine more than 90º in any direction and do not leave the machine tipped for any length of time. Oil can drain into the upper part of the engine causing a starting problem.

5. Wash the machine off with water. Be sure to clean out materials from under the hopper.

   IMPORTANT: Do not use a pressure washer to clean your unit. These may cause damage to bearings, or the engine.

6. Put the machine back on its wheels on the ground.

Lubrication

WARNING! Before lubricating, repairing, or inspecting, always set parking brake, stop engine and remove key to prevent unintended starting.

Front Wheel/Axle Bearings

The front wheel bearings (A) and the front axle bearings (C) is equipped with grease fittings. See Fig. 6-1.

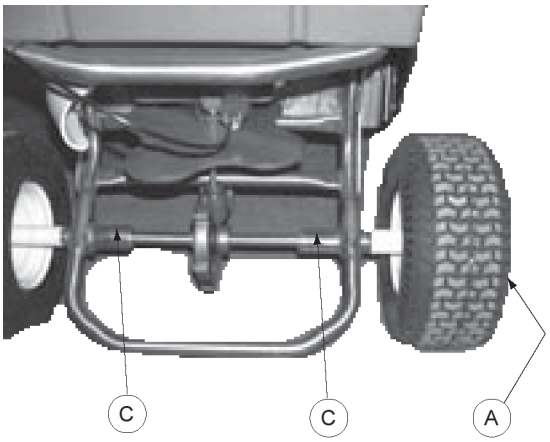

Figure 6-1

Pivot Points

Lubricate the two grease fittings (B) on the pivot assembly. See Figure 6-2.

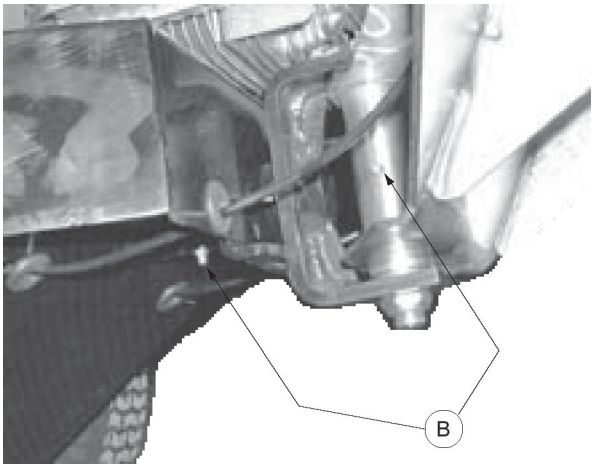

Figure 6-2

Changing the Pump Drive Belt

1. At the top of the engine base, remove the guard covering the transmission fan/pulley.
2. Access engine drive pulley, idler pulley and belt from the left hand side of the unit. See Fig. 6-3.

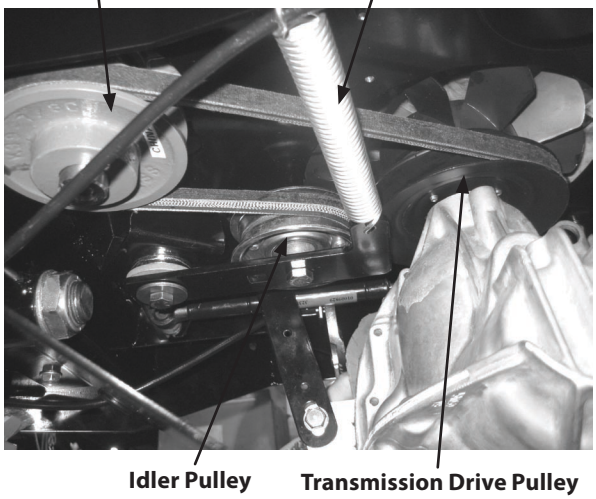

Figure 6-3

3. Release the drive belt idler tension by disconnecting the idler arm tension spring where it is attached to the engine base frame. See Fig. 6-3.
4. Remove the old belt and mount a new belt onto the transmission drive pulley and the engine drive pulley. Install the belt onto the alternator drive pulley, if equipped. See Fig. 6-3.
5. Position the idler pulley on the outer edge of the drive belt.
6. Reconnect the tension spring to the engine base frame.
7. Reinstall the guard covering the transmission fan/pulley.

Off-Season Storage

The following steps should be taken to prepare your unit for storage.

- Clean and lubricate the unit thoroughly as described in the lubrication instructions.
- Do not use a pressure washer to clean your unit.
- Place the machine in locked storage to avoid tampering or use by an untrained operator.
- Store the unit in a dry, clean area. Do not store next to corrosive materials, such as fertilizer.

If the machine is to be in storage for more than 30 days, drain the fuel tank, run the engine to drain the carburetor dry, change the oil, remove the spark plug and pour a teaspoonful of oil into the cylinder. Pull the starter to crank the engine and distribute the oil then replace the spark plug.

When storing any type of power equipment in a poorly ventilated or metal storage shed, care should be taken to rust-proof the equipment. Using a light oil or silicone, coat the equipment, especially cables and all moving parts of your machine before storage.

Maintenance Schedule

	Before Each use	Every 10 Hours	Every 25 Hours	Every 100 Hours	Every 300 Hours	Prior to Storing
Clean the machine and allow to dry	✓					✓
Check Engine Oil Level	✓					
Check Air Filter for Dirty, Loose or Damaged Parts	✓					
Check the fuel level	✓					
Clean the cooling-air intake	✓					
Clean Battery Terminals		✓				✓
Clean and Re-oil Air Filter's Elements			✓			
Lube Front Axle			✓			✓
Lube Pivot Points			✓			✓
Lube Front Wheel			✓			✓
Check condition and tension of transaxle belt				✓		
Replace Air Filter Element				✓		
Change Engine Oil and Replace Oil Filter				✓		✓
Check all nuts, bolts and screws are tight				✓		✓
Replace Spark Plug				✓		
Change Transaxle Drive Belt					✓	
Check Spark Plug Condition & Gap						✓

Engine Oil: Use 10W30, 10W40 or Shell Rimula 15W40 oil rated SF or higher.

General Purpose Lubrication: Use any NLGI grade 2 multi-purpose grease. Shell Albida EP2 is recommended. Shell Albida EP 2 is a red-colored multi-purpose grease designed for heavy-duty bearing applications. It has high base oil viscosity for mechanical stability, has been formulated for high load, low-speed applications, and has excellent lubrication and corrosion protection.

Troubleshooting

7

Problem	Cause	Remedy
Engine Fails to start	1. Spark plug boot disconnected. 2. Fuel tank empty or stale fuel. 3. Engine not primed (if equipped with primer). 4. Faulty spark plug. 5. Blocked fuel line. 6. Engine flooded. 7. Fuel valve (if equipped) closed. 8. Engine not choked (if equipped with choke).	1. Connect wire to spark boot. 2. Fill tank with clean, fresh gasoline. 3. Prime engine as instructed in the Operation section. 4. Clean, adjust gap, or replace. 5. Clean fuel line. 6. Wait a few minutes to restart, but do not prime. 7. Open fuel valve. See engine manual. 8. Choke engine. See engine manual.
Engine runs erratic	1. Spark plug boot loose. 2. Blocked fuel line or stale fuel. 3. Vent in gas cap plugged. 4. Water or dirt in fuel system. 5. Dirty air cleaner. 6. Unit running with CHOKE (if equipped) applied.	1. Connect and tighten spark plug boot. 2. Clean fuel line; fill tank with clean, fresh gasoline. 3. Clear vent. 4. Drain fuel tank. Refill with fresh fuel. 5. Refer to engine manual. 6. Move throttle lever to CHOKE OFF.
Engine overheats	1. Engine oil level low. 2. Air flow restricted.	1. Fill crankcase with proper oil. 2. Clean area around and on top of engine.
Occasional skips (hesitates) at high speed	1. Spark plug gap too close.	1. Adjust gap to .030”.
Idles poorly	1. Spark plug fouled, faulty, or gap too wide. 2. Dirty air cleaner.	1. Reset gap to .030” or replace spark plug. 2. Refer to engine manual.

Specifications

8

NOTE: Specifications subject to change without notice.

Specifications:

Model:	125 lb Spreader & 10 gallon Sprayer
Engine Mfg:	Kawasaki
HP:	6.5*
Type:	4 Cycle Single Cylinder
Starter:	Electric (Recoil Back-Up)
Air Cleaner:	Dual Element Dry
Lube:	Pressurized
Fuel Capacity:	2 Quarts
Charging System:	20 Amp Generator & Voltage Reg.
Battery:	12 VDC, 18 Amp-hour, Sealed
Traction Drive:	Hydro Gear, Model 510 Hydrostat
Hydraulic Oil Capacity:	0.7 Quarts
Hydraulic Filtration:	Internal
Ground Speed:	0 to 5 mph
Wheels:	18 x 8.50-8 rear, 13 x 7.50 front
Width:	37.25″
Height:	47″
Length:	60″
Weight:	445 lbs. empty

* As rated by engine manufacturer.

CALIFORNIA EMISSION CONTROL WARRANTY STATEMENT

YOUR WARRANTY RIGHTS AND OBLIGATIONS

The California Air Resources Board and MTD Consumer Group Inc are pleased to explain the evaporative emission control system warranty on your 2008 lawn mower. In California, new lawn mowers must be designed, built and equipped to meet the State's stringent anti-smog standards. MTD Consumer Group Inc must warrant the EECS on your lawn mower for the period of time listed below provided there has been no abuse, neglect or improper maintenance of your lawn mower.

Your EECS may include parts such as the carburetor, fuel-injection system, the ignition system, catalytic converter, fuel tanks, fuel lines, fuel caps, valves, canisters, filters, vapor hoses, clamps, connectors, and other associated emission-related components.

Where a warrantable condition exists, MTD Consumer Group Inc will repair your lawn mower at no cost to you including diagnosis, parts and labor.

MANUFACTURER'S WARRANTY COVERAGE:

This evaporative emission control system is warranted for two years. If any evaporative emission-related part on your equipment is defective, the part will be repaired or replaced by MTD Consumer Group Inc.

OWNER'S WARRANTY RESPONSIBILITIES:

As the lawn mower owner, you are responsible for performance of the required maintenance listed in your owner's manual. MTD Consumer Group Inc recommends that you retain all receipts covering maintenance on your lawn mower, but MTD Consumer Group Inc cannot deny warranty solely for the lack of receipts.

As the lawn mower owner, you should however be aware that MTD Consumer Group Inc may deny you warranty coverage if your lawn mower or a part has failed due to abuse, neglect, or improper maintenance or unapproved modifications.

You are responsible for presenting your lawn mower to MTD Consumer Group Inc's distribution center or service center as soon as the problem exists. The warranty repairs should be completed in a reasonable amount of time, not to exceed 30 days. If you have a question regarding your warranty coverage, you should contact the MTD Consumer Group Inc Service Department at 1-800-800-7310.

GENERAL EMISSIONS WARRANTY COVERAGE:

MTD Consumer Group Inc warrants to the ultimate purchaser and each subsequent purchaser that the lawn mower is: Designed, built and equipped so as to conform with all applicable regulations; and free from defects in materials and workmanship that cause the failure of a warranted part to be identical in all material respects to that part as described in MTD Consumer Group Inc's application for certification.

The warranty period begins on the date the lawn mower is delivered to an ultimate purchaser or first placed into service. The warranty period is two years.

Subject to certain conditions and exclusions as stated below, the warranty on emission-related parts is as follows:

1. Any warranted part that is not scheduled for replacement as required maintenance in the written instructions supplied, is warranted for the warranty period stated above. If the part fails during the period of warranty coverage, the part will be repaired or replaced by MTD Consumer Group Inc according to subsection (4) below. Any such part repaired or replaced under warranty will be warranted for the remainder of the period.
2. Any warranted part that is scheduled only for regular inspection in the written instructions supplied is warranted for the warranty period stated above. Any such part repaired or replaced under warranty will be warranted for the remaining warranty period.
3. Any warranted part that is scheduled for replacement as required maintenance in the written instructions supplied is warranted for the period of time before the first scheduled replacement date for that part. If the part fails before the first scheduled replacement, the part will be repaired or replaced by MTD Consumer Group Inc according to subsection (4) below. Any such part repaired or replaced under warranty will be warranted for the remainder of the period prior to the first scheduled replacement point for the part.
4. Repair or replacement of any warranted part under the warranty provisions herein must be performed at a warranty station at no charge to the owner.
5. Notwithstanding the provisions herein, warranty services or repairs will be provided at all of our distribution centers that are franchised to service the subject engines or equipment.
6. The lawn mower owner will not be charged for diagnostic labor that is directly associated with diagnosis of a defective, emission-related warranted part, provided that such diagnostic work is performed at a warranty station.
7. MTD Consumer Group Inc is liable for damages to other engine or equipment components proximately caused by a failure under warranty of any warranted part.
8. Throughout the lawn mower warranty period stated above, MTD Consumer Group Inc will maintain a supply of warranted parts sufficient to meet the expected demand for such parts.
9. Any replacement part may be used in the performance of any warranty maintenance or repairs and must be provided without charge to the owner. Such use will not reduce the warranty obligations of MTD Consumer Group Inc.
10. Add-on or modified parts that are not exempted by the Air Resources Board may not be used. The use of any non-exempted add-on or modified parts by the ultimate purchaser will be grounds for disallowing a warranty claims. MTD Consumer Group Inc will not be liable to warrant failures of warranted parts caused by the use of a non-exempted add-on or modified part.

WARRANTED PARTS:

The repair or replacement of any warranted part otherwise eligible for warranty coverage may be excluded from such warranty coverage if MTD Consumer Group Inc demonstrates that the lawn mower has been abused, neglected, or improperly maintained, and that such abuse, neglect, or improper maintenance was the direct cause of the need for repair or replacement of the part. That notwithstanding, any adjustment of a component that has a factory installed, and properly operating, adjustment limiting device is still eligible for warranty coverage. The following emission warranty parts are covered:

(1) Fuel Metering System

- Cold start enrichment system (soft choke)
- Carburetor and internal parts
- Fuel pump
- Fuel tank

(2) Air Induction System

- Air cleaner
- Intake manifold

(3) Ignition System

- Spark plug(s)
- Magneto ignition system

(4) Exhaust System

- Catalytic converter
- SAI (Reed valve)

(5) Miscellaneous Items Used in Above System

- Vacuum, temperature, position, time sensitive valves and switches
- Connectors and assemblies

(6) Evaporative Control

- Fuel hose certified for ARB evaporative emissions 2008
- Fuel hose clamps
- Tethered fuel cap
- Carbon canister
- Vapor lines

CUB CADET LLC
MANUFACTURER'S LIMITED WARRANTY
FOR COMMERCIAL LAWN APPLICATION EQUIPMENT

IMPORTANT: To obtain warranty coverage owner must present an original proof of purchase and applicable maintenance records to the servicing dealer. Please see the operator's manual for information on required maintenance and service intervals.

The limited warranty set forth below is given by Cub Cadet LLC with respect to new merchandise purchased or leased and used in the

United States and/or its territories and possessions, and by MTD Products Limited with respect to new merchandise purchased or leased and used in Canada and/or its territories and possessions (either entity respectively, "Cub Cadet").

Cub Cadet warrants this product (excluding its *Normal Wear Parts, Batteries and Attachments* as described below) against defects in material and workmanship for a period of one (1) year commencing on the date of original retail purchase or lease and will, at its option, repair or replace, free of charge, any part found to be defective in materials or workmanship.

Normal Wear Parts are warranted to be free from defects in material and workmanship for a period of thirty (30) days or one hundred (100) operation hours, whichever comes first, commencing on the date of original retail purchase or lease. Normal wear parts include, but are not limited to items such as: belts, blades, blade adapters, grass bags, rider deck wheels, seats, and tires.

Batteries have a one-year prorated limited warranty against defects in material and workmanship, with 100% replacement during the first three months. After three months, the battery replacement credit is based on the months remaining in the twelve (12) month period dating back to the original date of original sale or lease. Any replacement battery will be warranted only for the remainder of the original warranty period.

Attachments — Cub Cadet warrants attachments for this product against defects in material and workmanship for a period of one (1) year, commencing on the date of the attachment's original purchase or lease. Attachments include, but are not limited to items such as: grass collectors and mulch kits.

This limited warranty shall only apply if this product has been operated and maintained in accordance with the Operator's Manual furnished with the product, and has not been subject to misuse, abuse, neglect, accident, improper maintenance, alteration, vandalism, theft, fire, water, or damage because of other peril or natural disaster. Damage resulting from the installation or use of any part, accessory or attachment not approved by Cub Cadet for use with the product(s) covered by this manual will void your warranty as to any resulting damage. In addition, Cub Cadet may deny warranty coverage if the hour meter, or any part thereof, is altered, modified, disconnected or otherwise tampered with.

HOW TO OBTAIN SERVICE: Warranty service is available, WITH PROOF OF PURCHASE AND APPLICABLE MAINTENANCE RECORDS, through your local authorized service dealer. To locate the dealer in your area:

In the U.S.A.:
Check your Yellow Pages, or contact Cub Cadet LLC at P.O. Box 361131, Cleveland, Ohio 44136-0019, call 1-877-282- 8684 or log on to our website at www.cubcadet.com.

In Canada:
Contact MTD Products Limited, Kitchener, ON N2G 4J1, call 1-800-668-1238 or log on to our website at www.mtdcanada.com.

Without limiting the foregoing, this limited warranty does not provide coverage in the following cases:

a. Routine maintenance items such as lubricants, filters, blade sharpening, tune-ups, brake adjustments, clutch adjustments, deck adjustments, and normal deterioration of the exterior finish due to use or exposure.

b. Service completed by someone other than an authorized service dealer.

c. Cub Cadet does not extend any warranty for products sold or exported outside of the United States and/or Canada, and their respective possessions and territories, except those sold through Cub Cadet's authorized channels of export distribution.

d. Replacement parts and\or accessories that are not genuine Cub Cadet parts.

e. Transportation charges and service calls.

There are no implied warranties, including without limitation any implied warranty of merchantability or fitness for a particular purpose. No warranties shall apply after the applicable period of express written warranty above. No other express warranties beyond those mentioned above, given by any person or entity, including a dealer or retailer, with respect to any product, shall bind Cub Cadet. The exclusive remedy is repair or replacement of the product as set forth above. The terms of this warranty provide the sole and exclusive remedy arising from the sale and/or lease of the products covered hereby. Cub Cadet shall not be liable for any incidental or consequential loss or damage including, without limitation, expenses incurred for substitute or replacement lawn care services or for rental expenses to temporarily replace a warranted product.

Some jurisdictions do not allow the exclusion or limitation of incidental or consequential damages, or limitations on how long an implied warranty lasts, so the above exclusions or limitations may not apply to you.

In no event shall recovery of any kind be greater than the amount of the purchase price of the product sold. **Alteration of safety features of the product shall void this warranty.** You assume the risk and liability for loss, damage, or injury to you and your property and/or to others and their property arising out of the misuse or inability to use the product.

This limited warranty shall not extend to anyone other than the original purchaser or to the person for whom it was purchased as a gift.

HOW LOCAL LAWS RELATE TO THIS WARRANTY: This limited warranty gives you specific legal rights, and you may also have other rights that vary in different jurisdictions.

Cub Cadet LLC, P.O. BOX 361131 CLEVELAND, OHIO 44136-0019, Phone: 1-877-282-8684
MTD Products Limited, Kitchener, ON N2G 4J1, Phone: 1-800-668-1238

GDOC-100208 REV. A